REV	DATE	ECO	DESCRIPTION	BY	CK
00	8/93		RELEASED	GO	CE

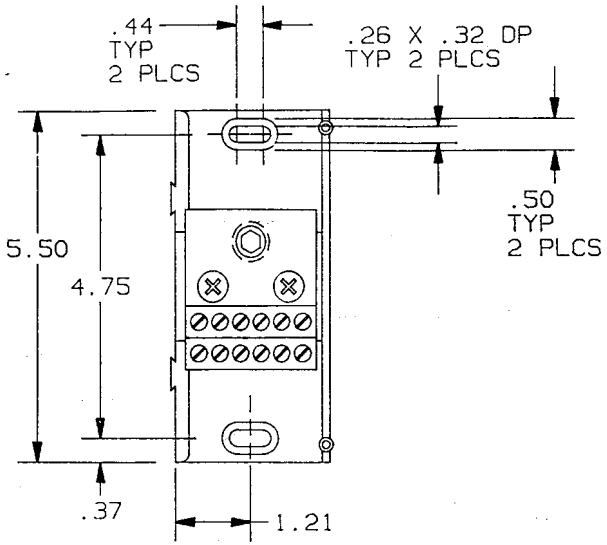

P/N	WIRE RANGE & TORQUE (IN-LBS)				UL		CSA
	PRIMARY		SECONDARY				
	RANGE	TORQUE	RANGE	TORQUE	FILE #	GUIDE #	REPORT #
68150	350-#6	350-#6 275	#4- #14	#4- #6 15 #8 40 #10- #14 35	E73571	XCFR2	LR69363
69150	350-#6	350-#6 275	#4- #14	#4- #8 40 #10- #14 35	E73571	XCFR2	LR15469

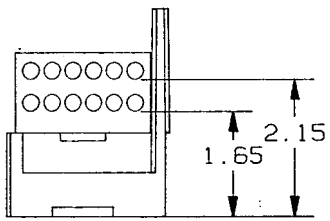

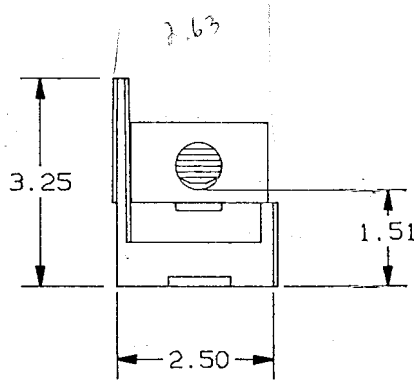

CONTROLLED COPY
ISSUED TO Newburyport
DATE AUG 30 1993

P/N 68150 (CU ONLY)
P/N 69150 (CU-AL)

2. (1) 350 MCM-#6 X (12) #4-#14, ADDER, 600V

1. MATL COMPOSITION AND RATING:
   BASE-THERMOPLASTIC-125 °C RTI
   CONNECTOR-ALUMINUM OR COPPER
   ALLOY-TIN PLATED.

NOTES: UNLESS OTHERWISE SPECIFIED

GOULD
GOULD INC.
P.O. BOX 729
MARBLE FALLS, TX 78654
CIRCUIT PROTECTION DIV.

TOLERANCE TO BE APPLIED UNLESS OTHERWISE SPECIFIED: .XXXX±.0005; .XXX±.005; .XX±.01; .X±.02; X/X±1/32
UNSPECIFIED ANGLES±1°, SPECIFIED ANGLES±0°30'
DIMENSIONS APPLY AFTER PLATING
ALL SURFACES TO BE 125√ UNLESS OTHERWISE SPECIFIED
BREAK ALL SHARP EDGES
THIS DRAWING AND ALL INFORMATION THERE ON IS THE PROPERTY OF GOULD INC. AND IS SUBJECT TO RETURN ON DEMAND. THIS INFORMATION IS CONFIDENTIAL AND MUST NOT BE MADE PUBLIC OR COPIED UNLESS AUTHORIZED.

DRAWN BY:	DATE:	INIT. REL.
KDS	8/93	
CHECKED BY:	DATE:	SCALE: NONE

REFDOC:

DESCRIPTION: PDB

IDENTIFICATION NO. & REVISION: 05B0447 00